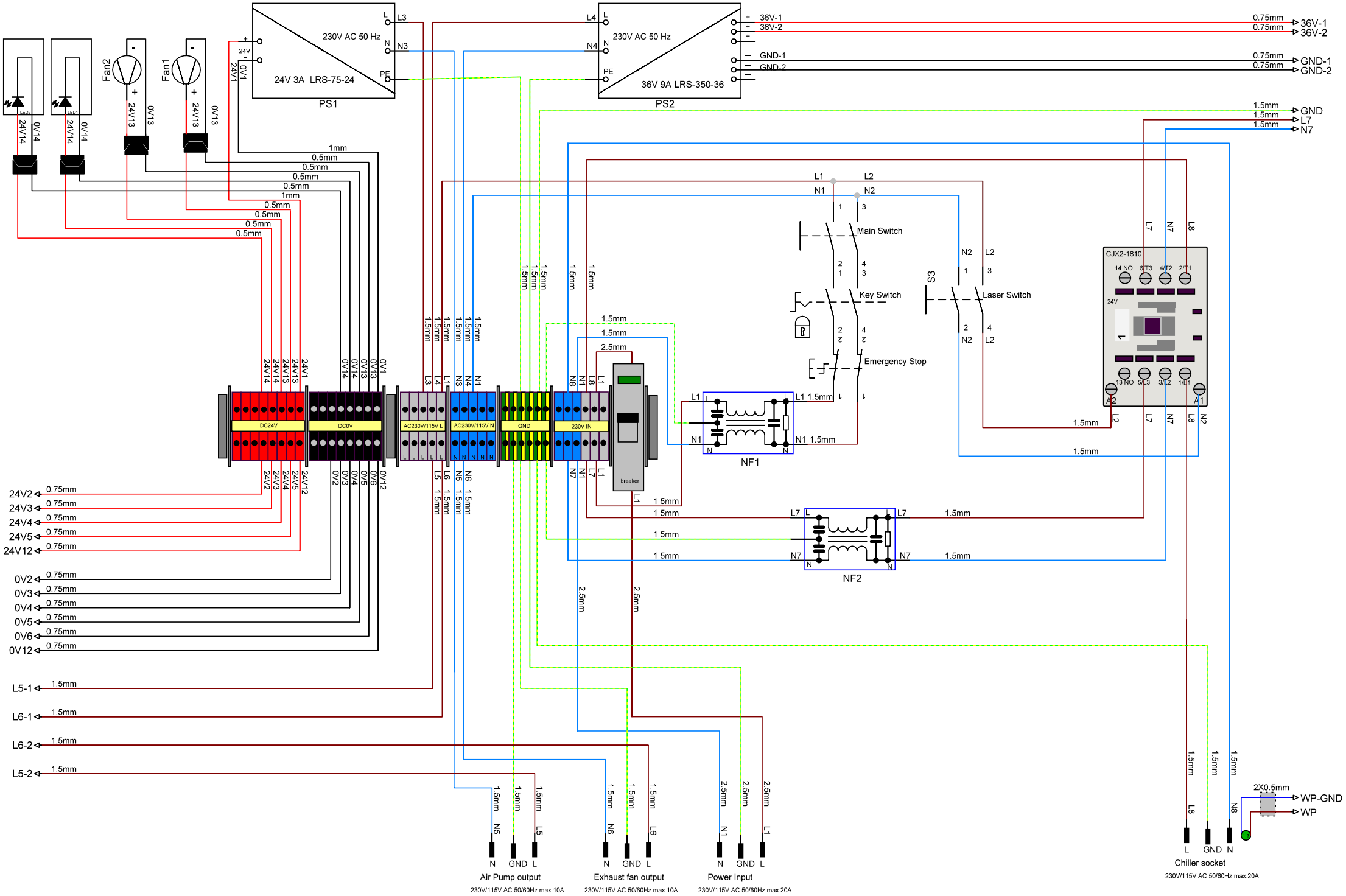
PS1
230V AC 50 Hz
24V 3A LRS-75-24
PS2
230V AC 50 Hz
36V 9A LRS-350-36
36V-1
36V-2
GND-1
GND-2
GND
L7
N7
Fan1
Fan2
LED1
LED2
Main Switch
Key Switch
Emergency Stop
Laser Switch
S3
CJX2-1810
NF1
NF2
breaker
DC24V
DC0V
AC230V/115V L
AC230V/115V N
GND
230V IN
24V2
24V3
24V4
24V5
24V12
0V2
0V3
0V4
0V5
0V6
0V12
L5-1
L6-1
L6-2
L5-2
WP-GND
WP
Air Pump output
230V/115V AC 50/60Hz max.10A
Exhaust fan output
230V/115V AC 50/60Hz max.10A
Power Input
230V/115V AC 50/60Hz max.20A
Chiller socket
230V/115V AC 50/60Hz max.20A

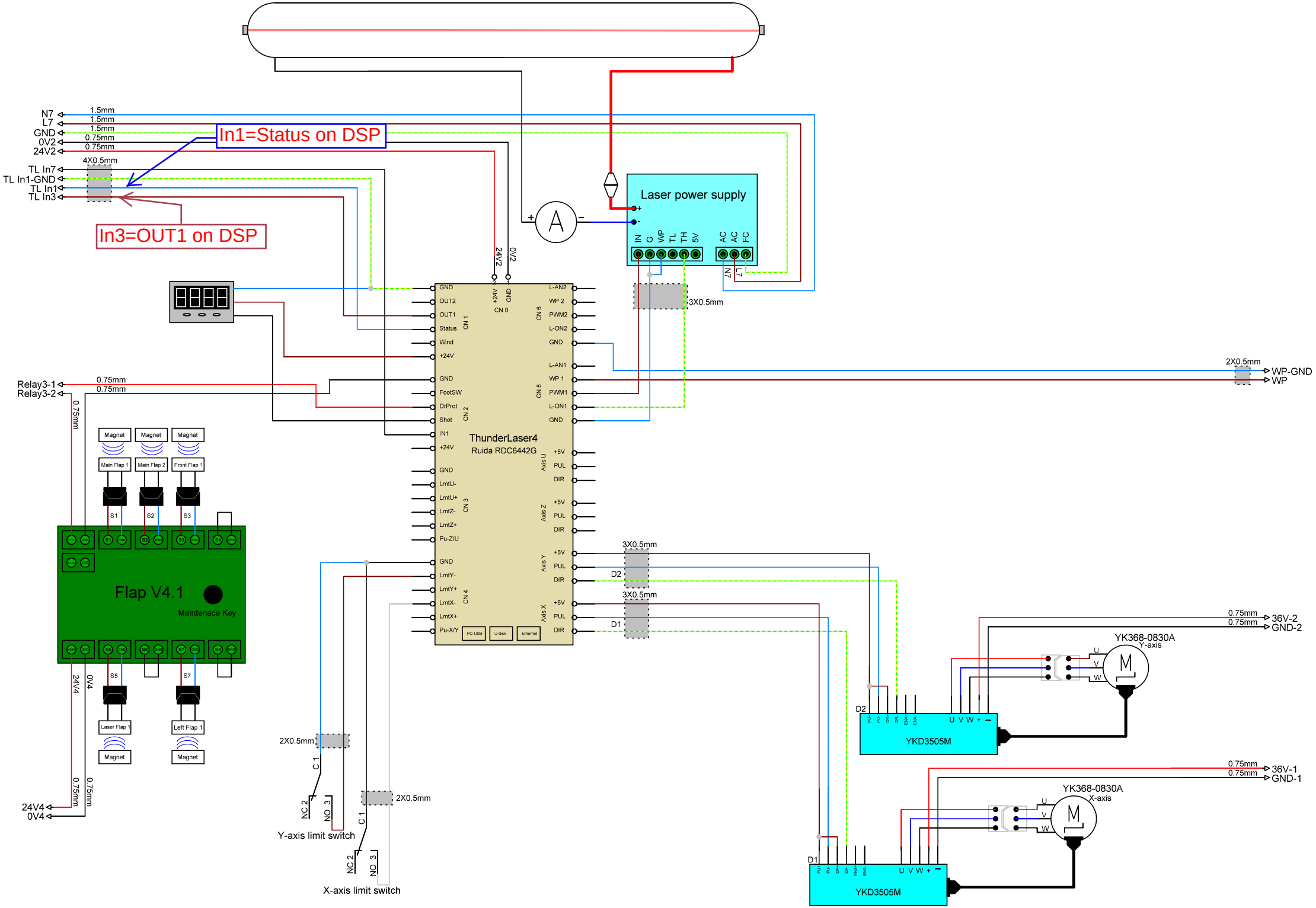
In1=Status on DSP
In3=OUT1 on DSP
N7
L7
GND
0V2
24V2
TL In7
TL In1-GND
TL In1
TL In3
1.5mm
0.75mm
4X0.5mm
Laser power supply
IN
G
WP
TL
TH
5V
AC
AC
FC
3X0.5mm
2X0.5mm
WP-GND
WP
Relay3-1
Relay3-2
ThunderLaser4
Ruida RDC6442G
GND
OUT2
OUT1
Status
Wind
+24V
FootSW
DrProt
Shot
IN1
LmtU-
LmtU+
LmtZ-
LmtZ+
Pu-Z/U
LmtY-
LmtY+
LmtX-
LmtX+
Pu-X/Y
L-AN2
WP 2
PWM2
L-ON2
L-AN1
WP 1
PWM1
L-ON1
+5V
PUL
DIR
Axis U
Axis Z
Axis Y
Axis X
PC-USB
U-disk
Ethernet
Magnet
Main Flap 1
Main Flap 2
Front Flap 1
Laser Flap 1
Left Flap 1
S1
S2
S3
S5
S7
Flap V4.1
Maintenace Key
24V4
0V4
D1
D2
YKD3505M
YK368-0830A
Y-axis
X-axis
36V-2
GND-2
36V-1
GND-1
C 1
NC 2
NO 3
Y-axis limit switch
X-axis limit switch

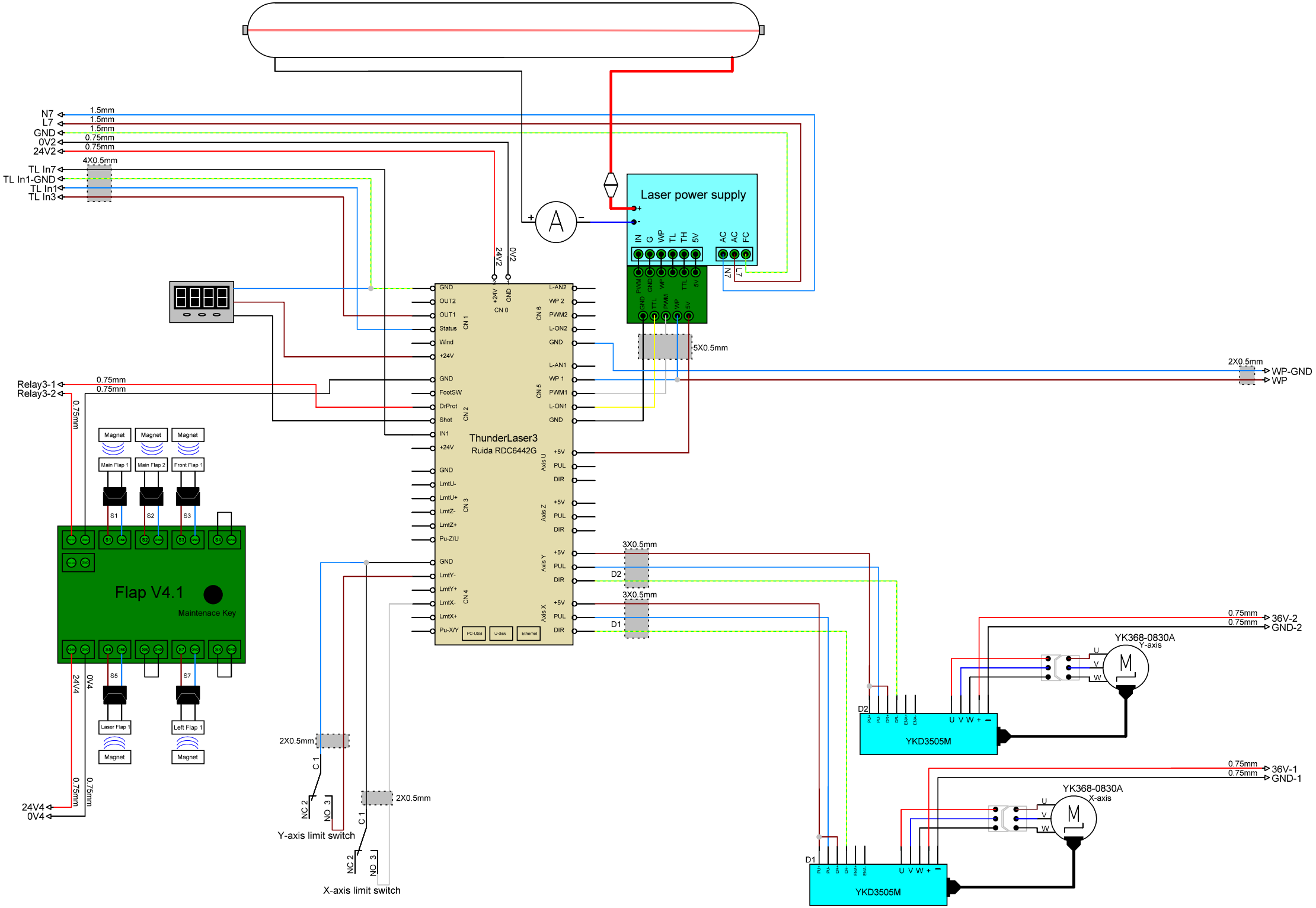
N7
L7
GND
0V2
24V2
TL In7
TL In1-GND
TL In1
TL In3
1.5mm
1.5mm
1.5mm
0.75mm
0.75mm
4X0.5mm
Laser power supply
IN G WP TL TH 5V
AC AC FC
PWM GND TTL WP WP 5V
5X0.5mm
2X0.5mm
WP-GND
WP
ThunderLaser3
Ruida RDC6442G
GND
OUT2
OUT1
Status
Wind
+24V
FootSW
DrProt
Shot
IN1
LmtU-
LmtU+
LmtZ-
LmtZ+
Pu-Z/U
LmtY-
LmtY+
LmtX-
LmtX+
Pu-X/Y
L-AN2
WP 2
PWM2
L-ON2
L-AN1
WP 1
PWM1
L-ON1
+5V
PUL
DIR
PC-USB
U-disk
Ethernet
Relay3-1
Relay3-2
0.75mm
0.75mm
Magnet
Main Flap 1
Main Flap 2
Front Flap 1
S1
S2
S3
Flap V4.1
Maintenace Key
S5
S7
Laser Flap 1
Left Flap 1
24V4
0V4
0.75mm
0.75mm
3X0.5mm
D2
3X0.5mm
D1
0.75mm
36V-2
0.75mm
GND-2
YK368-0830A
Y-axis
U
V
W
M
YKD3505M
0.75mm
36V-1
0.75mm
GND-1
YK368-0830A
X-axis
2X0.5mm
C 1
NC 2
NO 3
Y-axis limit switch
2X0.5mm
X-axis limit switch

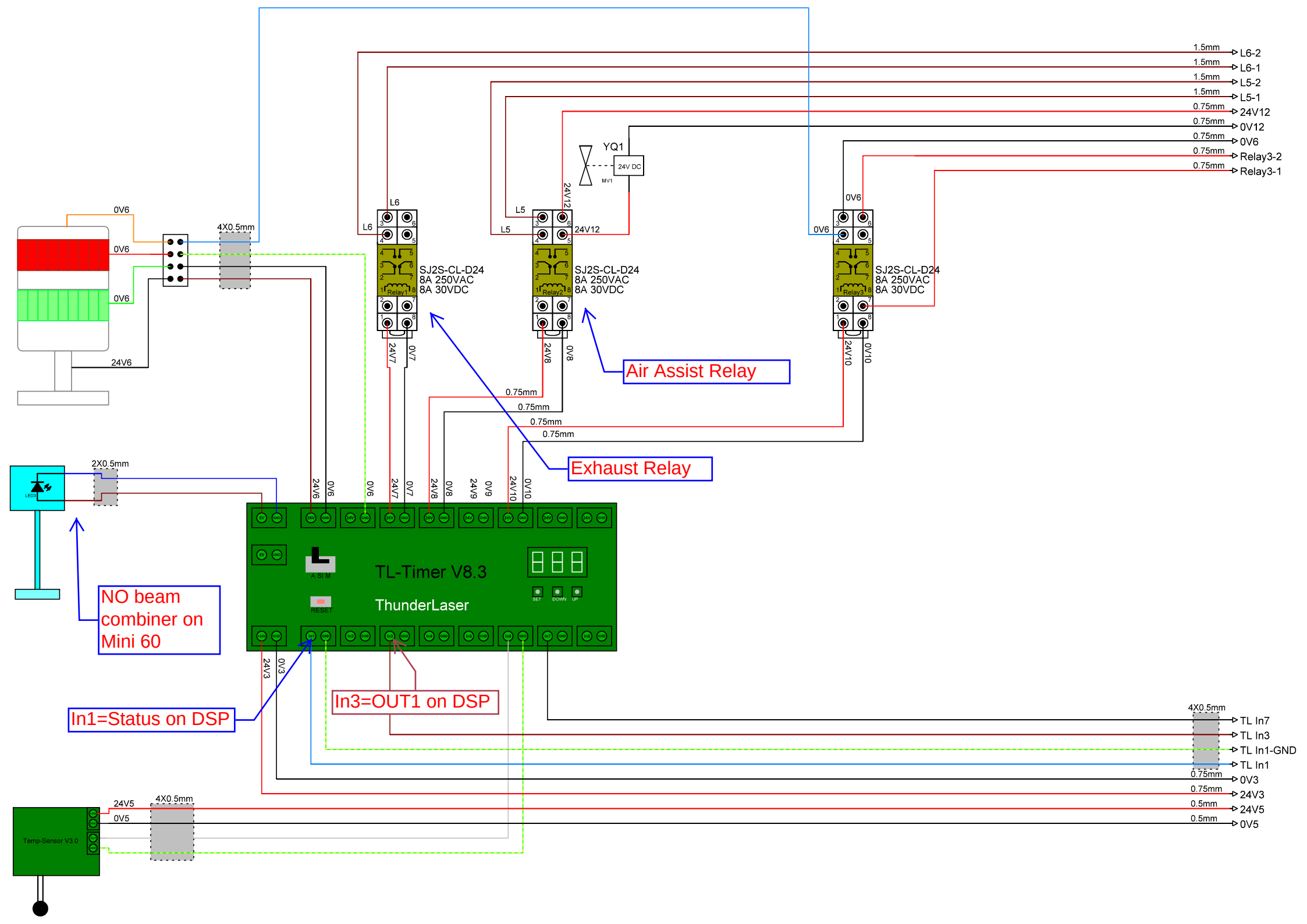
1.5mm L6-2
1.5mm L6-1
1.5mm L5-2
1.5mm L5-1
0.75mm 24V12
0.75mm 0V12
0.75mm 0V6
0.75mm Relay3-2
0.75mm Relay3-1
YQ1
24V DC
MV1
L6
L5
24V12
0V6
SJ2S-CL-D24
8A 250VAC
8A 30VDC
Relay1
Relay2
Relay3
24V7
0V7
24V8
0V8
24V10
0V10
0.75mm
Air Assist Relay
Exhaust Relay
4X0.5mm
0V6
24V6
2X0.5mm
LED1
24V6
0V6
24V7
0V7
24V8
0V8
24V9
0V9
24V10
0V10
TL-Timer V8.3
ThunderLaser
A SIM
RESET
SET
DOWN
UP
NO beam combiner on Mini 60
In1=Status on DSP
In3=OUT1 on DSP
24V3
0V3
4X0.5mm
TL In7
TL In3
TL In1-GND
TL In1
0.75mm 0V3
0.75mm 24V3
0.5mm 24V5
0.5mm 0V5
24V5
0V5
4X0.5mm
Temp-Sensor V3.0